AERE1610H

Lab 7: SolidWorks 1

Luis Eduardo Duran

March 6th, 2026

Purpose: To create the given BOSS part shown in the engineering drawing using SolidWorks.

1. The first step in the process was to draw a diagram of what we're supposed to create in SolidWorks. I drew the figure along with the measurements I was supposed to sketch. This is shown below.

2. Then, I opened SolidWorks, clicked front plane and then sketch. After this, I drew the general shape, later adjusting the lines to the proper measurements by using the additional parameters function and inputting the start and end points.
3. For the arc, I had to specify the center, start point, and end point using the parameters function. This was a little tricky and caused me to redo the entire thing

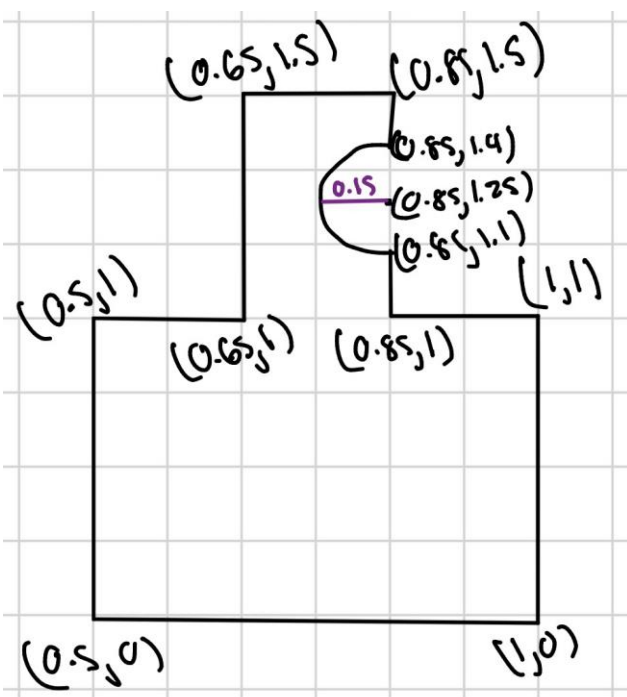

from scratch the first time around.

4. After I had the proper drawing and dimensions, I rotated it about a vertical axis. For that, I drew a line vertical to the origin of any size. Then, I clicked insert and revolve. I

selected the line I drew vertical to the origin as the axis of revolution, and the shape as the selected contour. Then, I clicked the green check and the 3D part showed up.

5. Now, I needed to create the hexagonal hole on the side of the part. I selected the right plane and then sketch. I clicked on polygon, circumscribed circle, and then 6 (since we need a hexagon). Then I filled out the parameters with the required measurements.
6. To make this hole visible in the part, I had to click on insert, cut, and extrude. I selected through all so that it goes through all the dimensions in the part. This showed me the final result which is attached below.

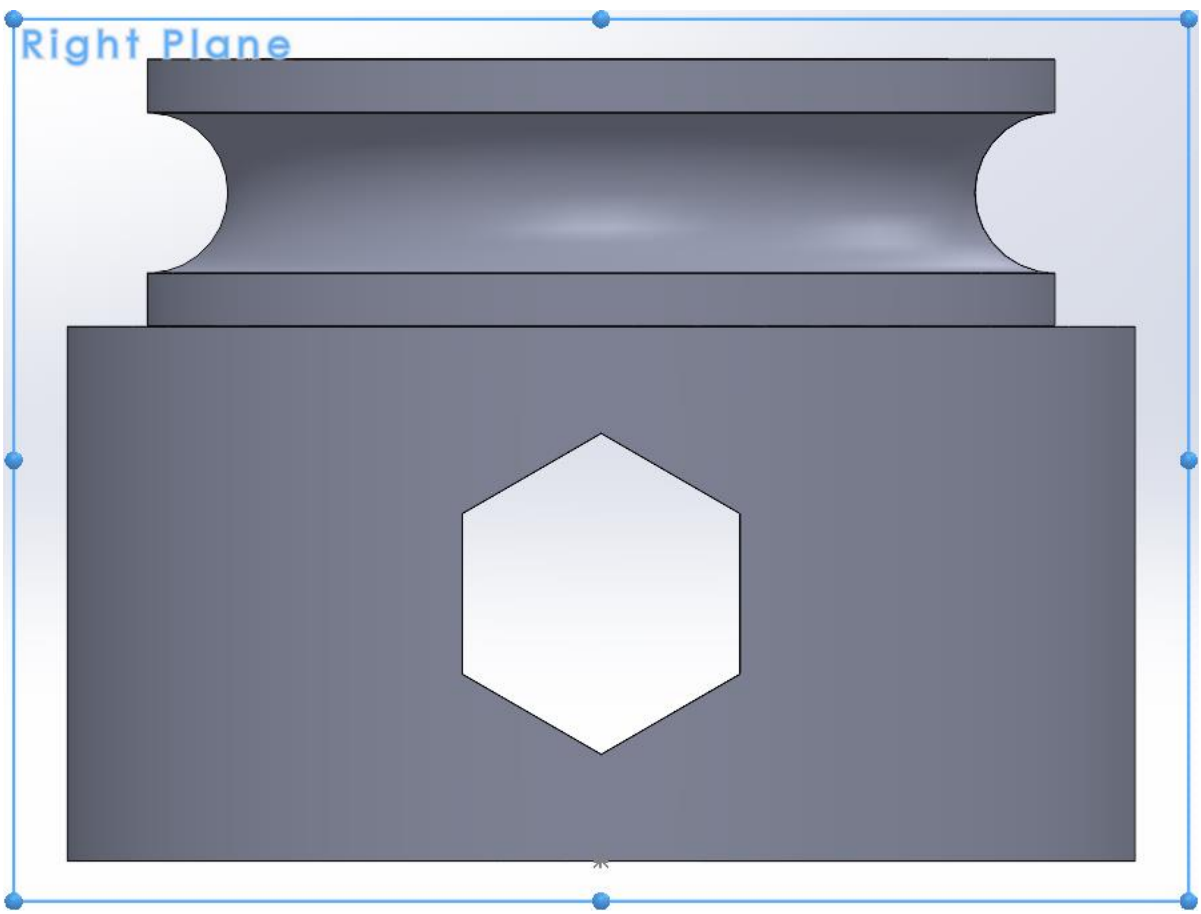

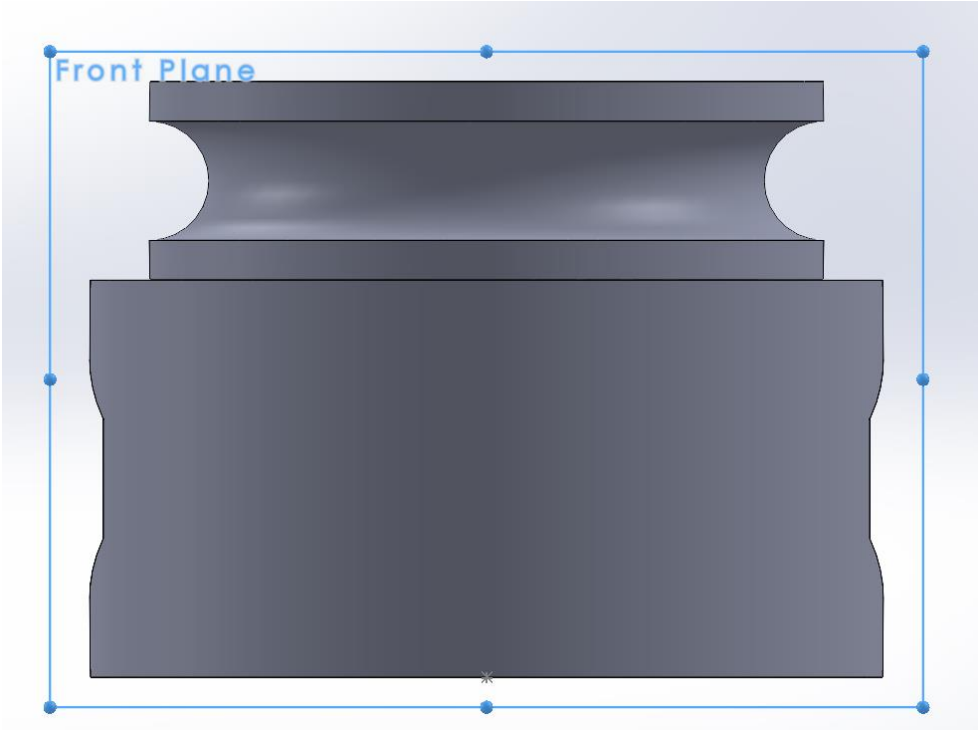
Front Plane

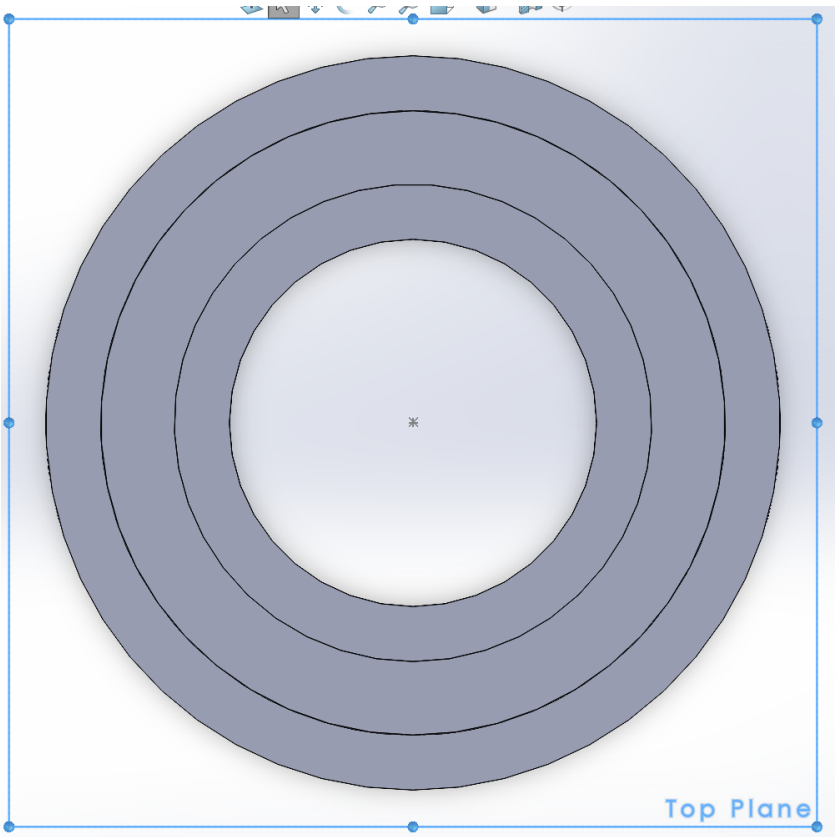
Top Plane